WORKING PRINCIPLE

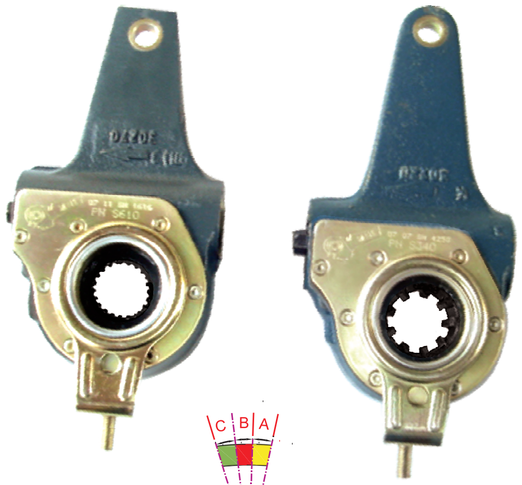

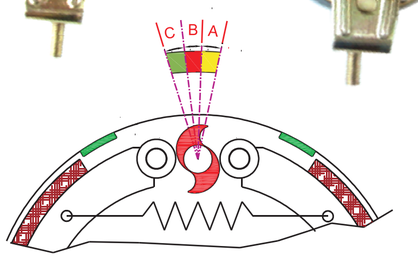

FOUNDATION BRAKE

Illustration showing the movement of slack adjuster during braking with excess clearence B

A The normal preset running clearence **A** for which no adjustment should be made;

B The excess clearence **B**, when lining and drum wear and for which adjustment should be made;

C The elasticity of the breaking system **C** which is caused by variable brake load, drum expansion and component flexibility, for which no adjustment should be made

9. ELIMINATING THE SLACK WITH ROTATION BACK THROUGH THE EXCESS CLEARANCE ZONE A

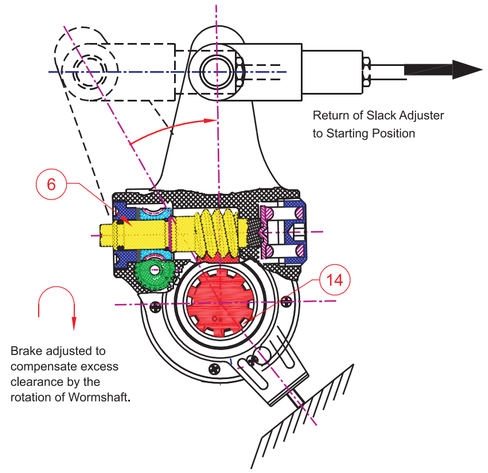

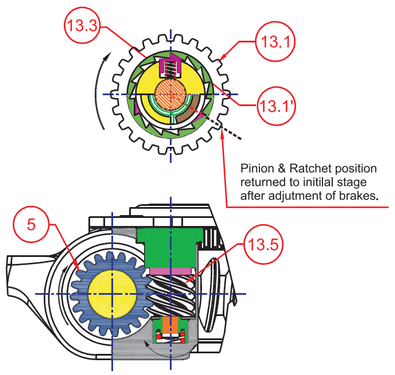

During the final releasing rotation of Automatic Slack Adjuster, the pinion & ratchet (13.1) rotated by the clutch worm wheel (5) in turn rotates the control worm screw (13.5) [by the one-way lock mechanism between ratchet (13.1') and pawl pin (13.3)] and the clutch worm wheel (5). The worm shaft (6) that is now engaged with clutch worm wheel (5) is rotated and in turn rotates the worm wheel (14) and 'S' camshaft to effect the adjustment of lining clearance. This is in proportion to the new engagement taken place during the brake application stroke explained earlier.

8. ROTATION BACK THROUGH THE CLEAR ZONE A

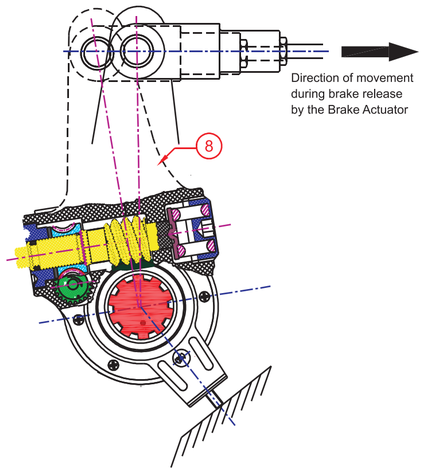

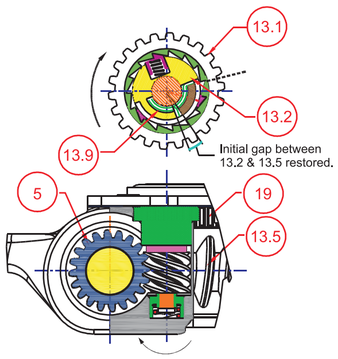

During the further release movement of brake actuator, the body (8) keeps rotating in clock-wise direction, the control gear wheel (19) continues to rotate the pinion & ratchet (13.1), but due to the friction on the control worm wheel (5) which is in clutch engaged condition, the control worm screw (13.5) is retained in same position and pawl housing (13.2) alone is rotatedwith the pinion & ratchet (13.1) until the closed gap between control worm screw (13.5) and pawl housing (13.2) is restored against the torsion spring (13.9). This movement covers the clearance stroke of the Automatic Slack Adjuster, which was achieved during the initial period of brake application.

1. STARTING POSITION

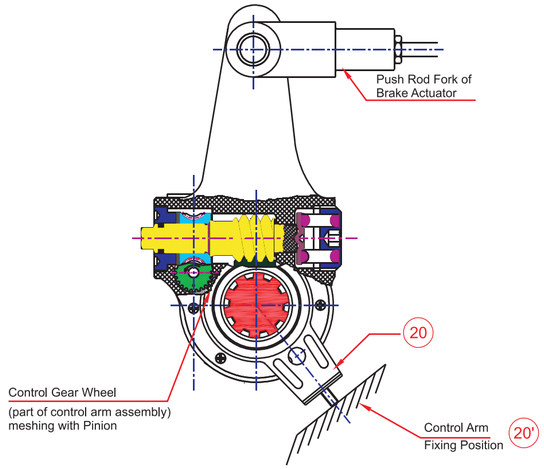

Pinion & Ratchet in Brake released condition

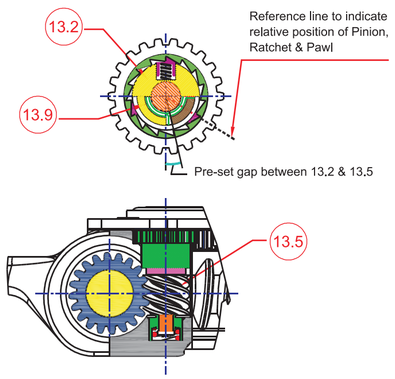

The control arm (20) of the SASA is fixed to the anchor bracket in a position where suitable location is available on the vehicle for fastening the control arm fixing position (20'). During the initial brake setting, the control worm screw (13.5) is getting positioned with a gap between pawl housing (13.2) and control worm screw (13.5) by the torsion spring (13.9) load. This is to determine the pre-set clearance that will be maintained between brake lining and the brake drum.

2. ROTATION THROUGH CLEARANCE ZONE A

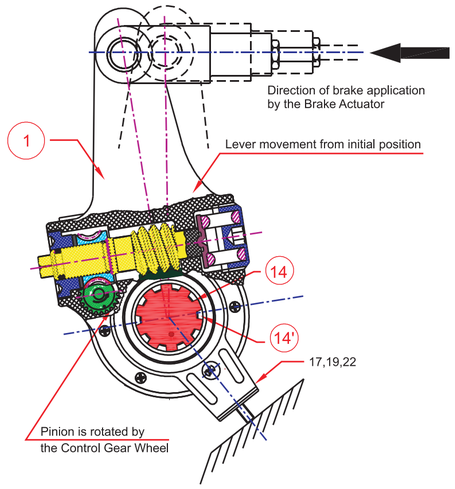

Brakes application - thro' clearence zone

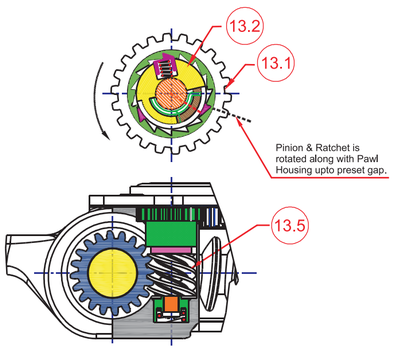

During the initial brake application, the pinion & ratchet (13.1) is rotated by the control arm assembly (17,19-22), due to the movement of the ASA body and the pawl housing (13.2) is also rotated along with pinion & ratchet (13.1) up to the preset gap between the stepped faces of control worm screw (13.5) and pawl housing (13.2) to ensure predetermined clearance stroke. Simultaneously the worm wheel (14) is rotated in the counter clockwise direction along with Automatic Slack Adjuster body (1); in turn the S camshaft engaged with the worm wheel spline (14') is rotated to lift the brake lining towards the brake drum.

7. ROTATION BACK INTO THE CLEARANCE ZONE A

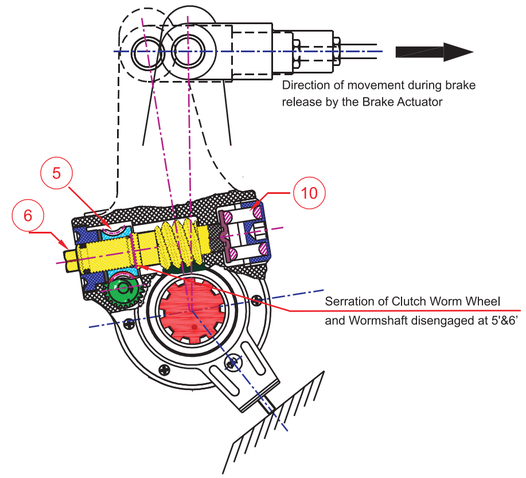

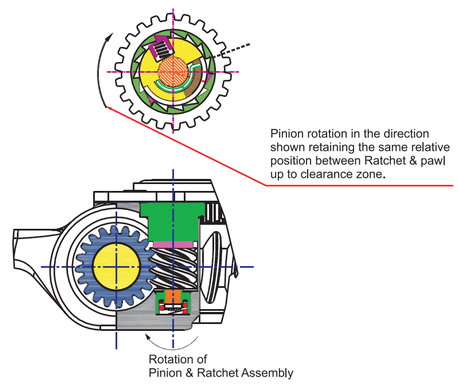

Once the brake lining moves away from the brake drum, the force is reduced and the load of the heavy compression spring (10) moves the worm shaft (6) to engage the clutch preventing the free rotation of clutch worm wheel (5).

6. ROTATION BACK THROUGH ELASTICITY ZONE C

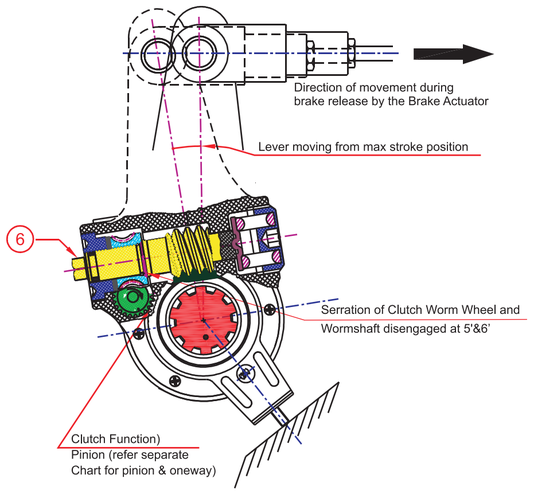

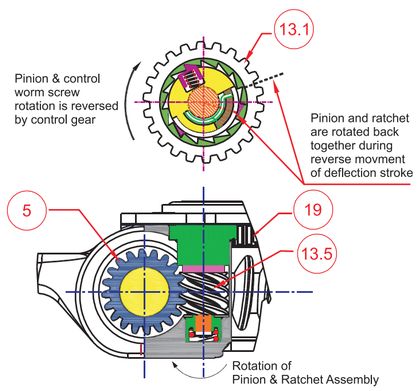

When the brake is released, the pinion & ratchet (13.1) is rotated in clockwise direction by the control gear wheel (19), opposite to the direction of brake application and the control worm screw (13.5) follows the rotation of pinion & ratchet (13.1) as a whole unit along with clutch worm wheel (5) covering the deflection stroke of the Automatic Slack Adjuster. However the worm shaft (6) remains static as the clutch is disengaged between serrations (6") and (5').

3. ROTATION THROUGH THE EXCESS CLERANCE ZONE B

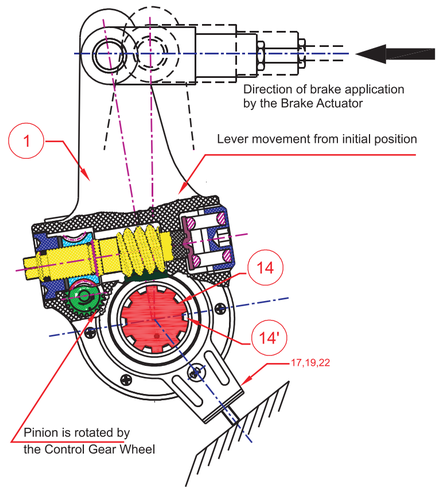

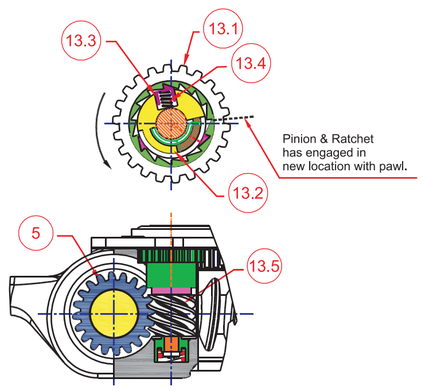

When there is excess clearance due to wear in drum and lining, the lining does not touch the brake drum. During the further rotation (after passing through clearance stroke cycle) of the ratchet mechanism in the pinion & ratchet (13.1), overrides against pawl spring (13.4) load and gets a new engagement with the pawl (13.3) fixed to the powl housing (13.2).
This is because control worm screw (13.5) is prevented from rotation by clutch worm gear (5) due to excess friction on the clutch worm gear (5) with its serration (5') fully engaged on the worm shaft serration (6").

4. ROTATION INTO THE ELASTICITY ANGLE C

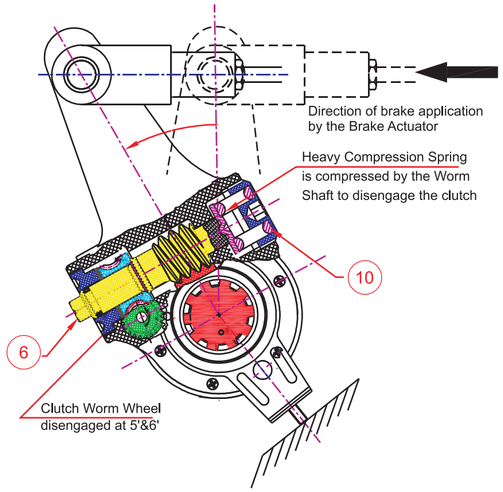

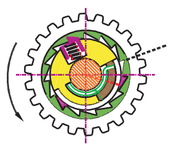

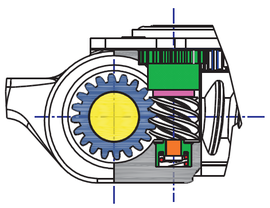

Once the brake lining engages the brake drum, the counter force increases and worm shaft (6) moves axially compressing the heavy compression spring (10). Clutch is disengaged as the serrated portion of worm shaft (6") is moved away from the clutch worm wheel serration (5').

5. ROTATION THROUGH ELASTICITY ZONE - C

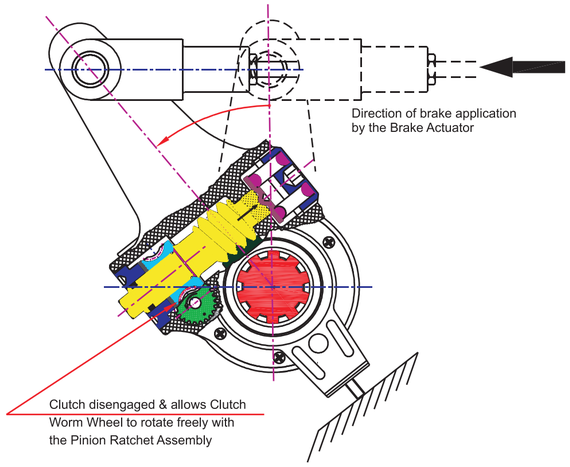

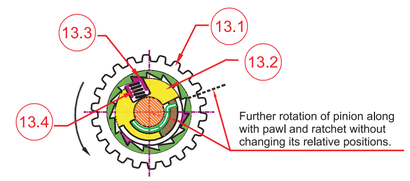

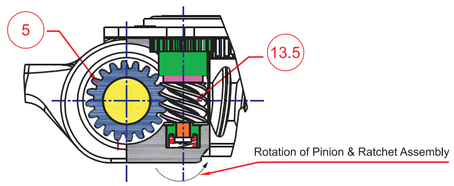

As the clutch is now disengaged, the resistance on the clutch worm wheel (5) is greatly reduced and permits the control worm screw (13.5) to rotate with the pinion & ratchet (13.1) as a whole unit retaining the relative positions. Thereby the lever movement during this period (expansion / deflection zone) is ignored. During this operation if there is any partial engagement between the pawl & ratchet the Pawl Housing (13.2) will slightly slip back with the control worm screw (13.5) due to Pawl sprilng (13.4) load to engage in the previous ratchet.